ESP32-DevKitC V4

[中文]

The older version: ESP32-DevKitC V2

This guide shows how to start using the ESP32-DevKitC V4 development board.

What You Need

- ESP32-DevKitC V4 board
- USB 2.0 cable (Standard-A to Micro-B)
- Computer running Windows, Linux, or macOS

You can skip the introduction sections and go directly to Section Start Application Development.

Overview

ESP32-DevKitC V4 is a small-sized ESP32-based development board produced by Espressif. Most of the I/O pins are broken out to the pin headers on both sides for easy interfacing. Developers can either connect peripherals with jumper wires or mount ESP32-DevKitC V4 on a breadboard.

To cover a wide range of user requirements, the following versions of ESP32-DevKitC V4 are available:

- different ESP32 modules
    - ESP32-WROOM-32E
    - ESP32-WROOM-32UE
    - ESP32-WROVER-E
    - ESP32-WROVER-IE
    - ESP32-WROOM-32D
    - ESP32-WROOM-32U
    - ESP32-WROOM-DA (End of Life)
    - ESP32-SOLO-1
    - ESP32-WROOM-32

- male or female pin headers

For details please refer to ESP Product Selector.

Functional Description

The following figure and the table below describe the key components, interfaces and controls of the ESP32-DevKitC V4 board.

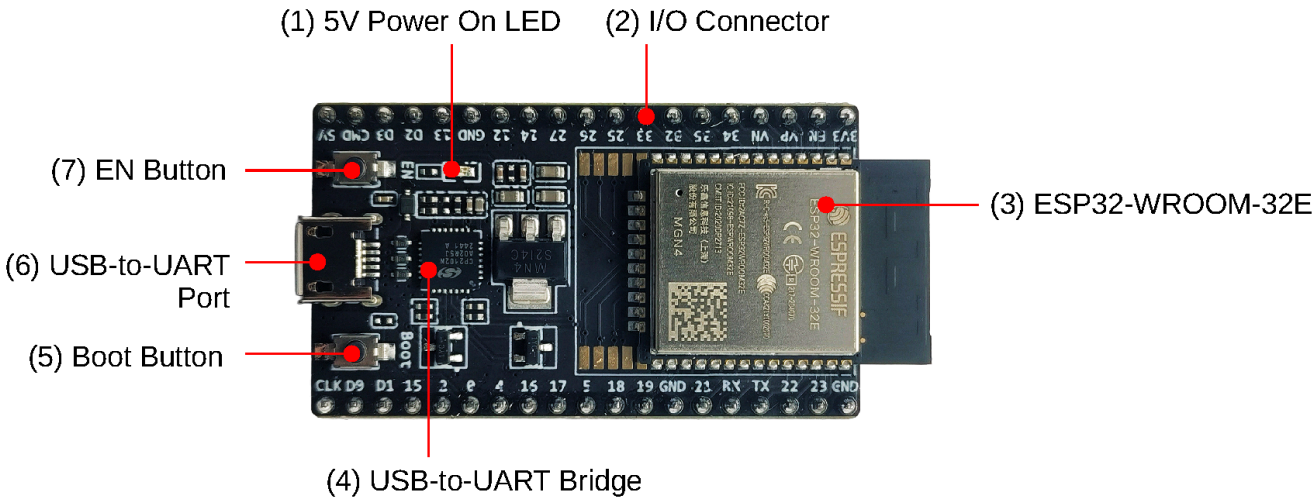

ESP32-DevKitC V4 with ESP32-WROOM-32E module soldered

The key components of the board are described, starting from the 5V Power On LED, in a clockwise direction.

No.	Key Component	Description
1	5V Power On LED	Turns on when the USB or an external 5V power supply is connected
2	I/O Connector	Most of the pins on the ESP module are broken out to the pin header
3	ESP32-WROOM-32E	A module with ESP32 at its core. For more information, see ESP32-W
4	USB-to-UART Bridge	Single USB-to-UART bridge chip, providing transfer rates up to 3 Mb
5	Boot Button	Download button. Holding down **Boot** and then pressing **EN** initiates
6	USB-to-UART Port	A Micro-USB port used for power supply to the board, as well as for
7	EN Button	Reset button.

Power Supply Options

There are three mutually exclusive ways to provide power to the board:

- Micro USB port, default power supply
- 5V and GND header pins
- 3V3 and GND header pins

Warning

The power supply must be provided using **one and only one of the options above**, otherwise the board and/or the power supply source can be damaged.

Header Block

The two tables below provide the **Name** and **Function** of I/O header pins on both sides of the board, as shown in ESP32-DevKitC V4 with ESP32-WROOM-32E module soldered.

J2

No.	Name	Type [1]	Function
1	3V3	P	3.3 V power supply
2	EN	I	CHIP_PU, Reset
3	VP	I	GPIO36, ADC1_CH0, S_VP
4	VN	I	GPIO39, ADC1_CH3, S_VN
5	IO34	I	GPIO34, ADC1_CH6, VDET_1
6	IO35	I	GPIO35, ADC1_CH7, VDET_2
7	IO32	I/O	GPIO32, ADC1_CH4, TOUCH_CH9, XTAL_32K_P
8	IO33	I/O	GPIO33, ADC1_CH5, TOUCH_CH8, XTAL_32K_N
9	IO25	I/O	GPIO25, ADC2_CH8, DAC_1
10	IO26	I/O	GPIO26, ADC2_CH9, DAC_2
11	IO27	I/O	GPIO27, ADC2_CH7, TOUCH_CH7
12	IO14	I/O	GPIO14, ADC2_CH6, TOUCH_CH6, MTMS
13	IO12	I/O	GPIO12, ADC2_CH5, TOUCH_CH5, MTDI
14	GND	G	Ground
15	IO13	I/O	GPIO13, ADC2_CH4, TOUCH_CH4, MTCK
16	D2	I/O	GPIO9, D2 [2]
17	D3	I/O	GPIO10, D3 [2]
18	CMD	I/O	GPIO11, CMD [2]

No.	Name	Type [1]	Function
19	5V	P	5 V power supply

J3

No.	Name	Type [1]	Function
1	GND	G	Ground
2	IO23	I/O	GPIO23
3	IO22	I/O	GPIO22
4	TX	I/O	GPIO1, U0TXD
5	RX	I/O	GPIO3, U0RXD
6	IO21	I/O	GPIO21
7	GND	G	Ground
8	IO19	I/O	GPIO19
9	IO18	I/O	GPIO18
10	IO5	I/O	GPIO5
11	IO17	I/O	GPIO17 [3]
12	IO16	I/O	GPIO16 [3]
13	IO4	I/O	GPIO4, ADC2_CH0, TOUCH_CH0
14	IO0	I/O	GPIO0, ADC2_CH1, TOUCH_CH1, Boot
15	IO2	I/O	GPIO2, ADC2_CH2, TOUCH_CH2
16	IO15	I/O	GPIO15, ADC2_CH3, TOUCH_CH3, MTDO
17	D1	I/O	GPIO8, D1 [2]
18	D0	I/O	GPIO7, D0 [2]
19	CLK	I/O	GPIO6, CLK [2]

[1] (1,2): P: Power supply; I: Input; O: Output.

[2] (1,2,3,4,5,6): The pins D0, D1, D2, D3, CMD and CLK are used internally for communication between ESP32 and SPI flash memory. They are grouped on both sides near the USB connector. Avoid using these pins, as it may disrupt access to the SPI flash memory/SPI RAM.

[3] (1,2): The pins GPIO16 and GPIO17 are available for use only on the boards with the modules ESP32-WROOM and ESP32-SOLO-1. The boards with ESP32-WROVER modules have the pins reserved for internal use.

Pin Layout

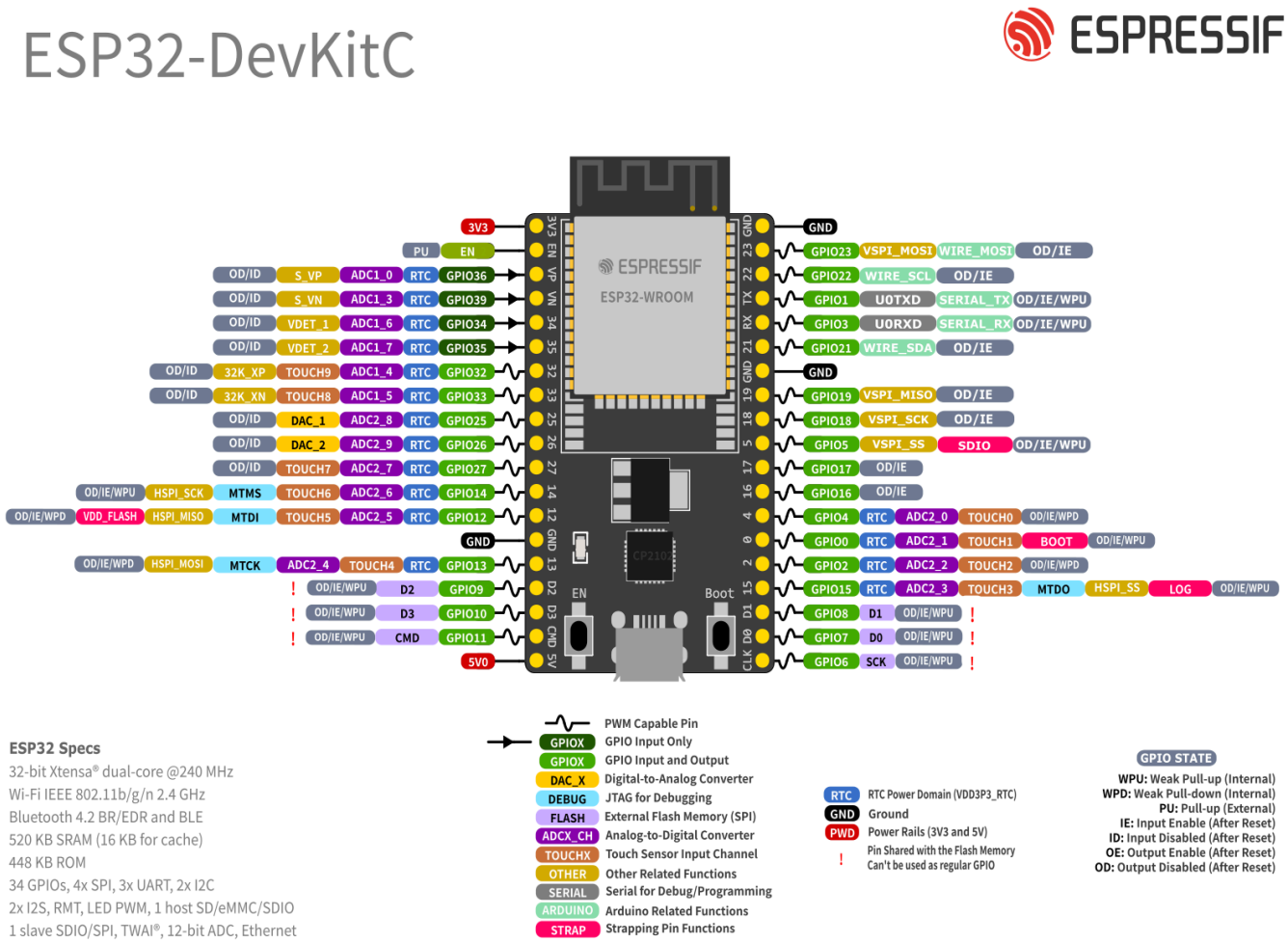

ESP32-DevKitC Pin Layout (click to enlarge)

Note on C15

The component C15 may cause the following issues on earlier ESP32-DevKitC V4 boards:

- The board may boot into Download mode
- If you output clock on GPIO0, C15 may impact the signal

In case these issues occur, please remove the component. The figure below shows the location of C15 highlighted in yellow.

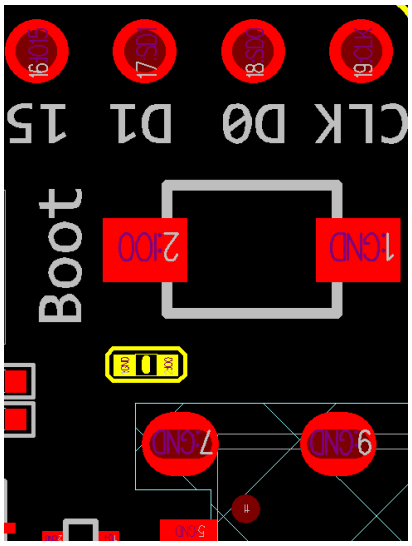

Location of C15 (yellow) on ESP32-DevKitC V4 board

Start Application Development

Before powering up your ESP32-DevKitC V4, please make sure that the board is in good condition with no obvious signs of damage.

After that, proceed to ESP-IDF Get Started, which will quickly help you set up the development environment then flash an application example onto your board.

Related Documents

- ESP32 Datasheet (PDF)
- ESP32-DevKitC V4 Schematics (PDF)
- ESP32-DevKitC V4 PCB Layout (PDF)
- ESP32-DevKitC V4 Dimensions (PDF)
- ESP32-DevKitC V4 Dimensions source file (DXF) - You can view it with Autodesk Viewer online
- ESP Product Selector

For further design documentation for the board, please contact us at sales@espressif.com.